85R

85R TYPED WIDE GRID CEILING SERIES

85R TYPED WIDE GRID CEILING SERIES

-C typed ceiling panels can be united perfectly
-85R typed has beautiful edge
-B typed has rigid edge
-A typed has crevice between ceiling panels, it creates a three dimensional effect. With hangers support, some of them are in wind-proofing.

Different in-fill panel styles are available for customer.

85R天花系列

確定寬度位置，吊掛支撐；可以有部分防風效果.
85R戶內(戶外)
-C型邊拼密性好；
-85R型邊線條美；
-B型邊剛直；
-A型
片間縫隙略有立體效果；
專用龍骨準確定寬度位置，

FINE POINT CEILING ™ FINE POINT CEILING SYSTEM

85R Typed Wide Grid Ceiling Series

Materials
Aluminum, Iron and Stainless Steel.
Coating
High quality powder coat static painting utilized, special color offer on special requirement.
Processing
Scissors and tooth sae available.
Cleaning
Cleaning with water or cleanser.
Size
#85mm
#135mm
#185mm

85R天花系列
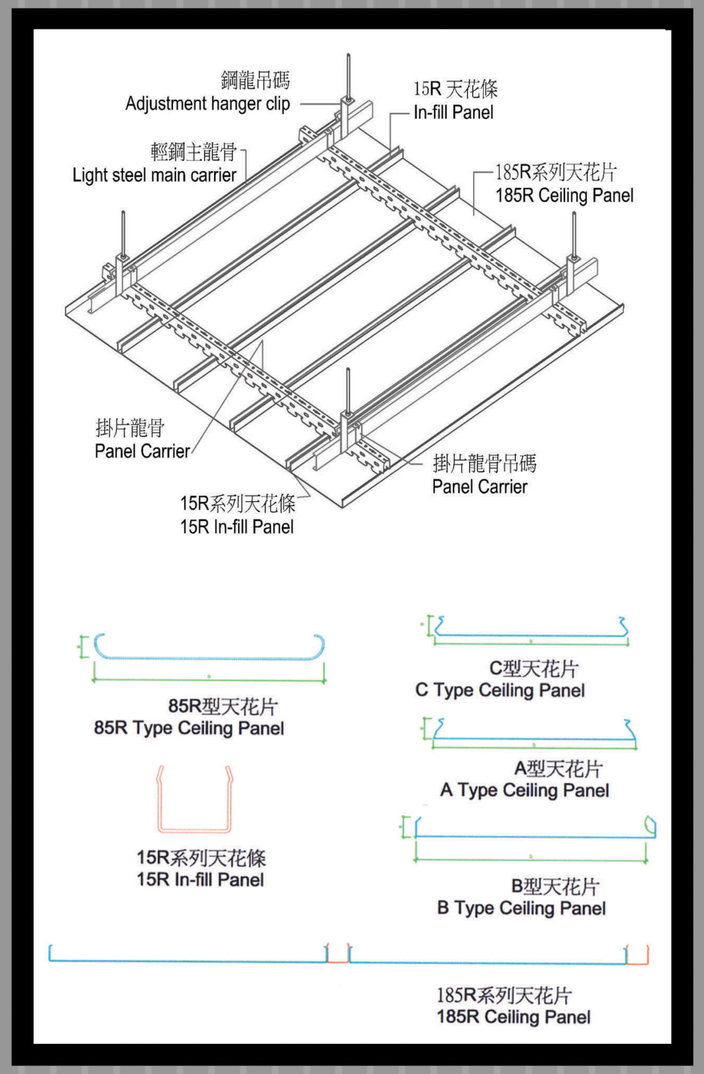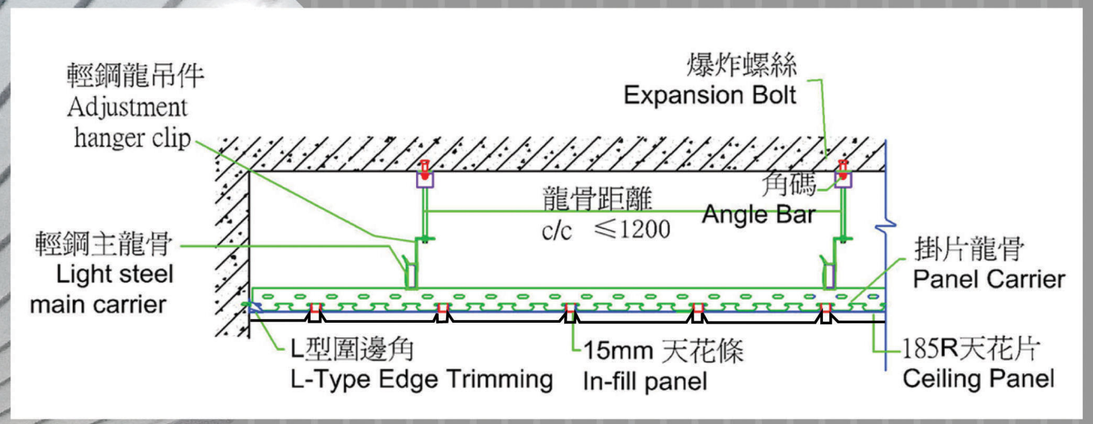
材料
鋁，鐵，不銹鋼。
表面塗層
採用高級粉沫靜電噴塗噴漆，如需特別顏色，可來色定做。
可加工性
可使用剪刀或齒鋸等工具。
清潔
可使用清水或清潔劑等清潔。
規格尺寸
#85mm
#135mm
#185mm